PYQSide PYQSide.com — free PYQs with solutions Powered by PrepBlink

NEET BIOTECHNOLOGY: PRINCIPLES AND PROCESSES — PYQS

Max. Marks: 460 **Questions:** 115

Section A (MCQ) — 115 questions

Q.1 Which of the following statements are not true regarding restriction endonucleases?

A. They are called molecular scissors.
B. These are the enzymes responsible for restricting the growth of bacteriophages in *E. coli*.
C. They cut the DNA only at the centre of the palindromic sites.
D. They remove nucleotides only from the ends of DNA fragments.
E. They recognise specific palindromic base-pair sequences.

Choose the answer from the options given below : [NEET (UG) 2026]

(1) C and D only (2) A and E only
(3) D and E only (4) A and B only

Scan or tap for the full solution

Q.2 Identify the correct sequence of steps in each cycle of Polymerase Chain Reaction : [NEET (UG) 2026]

(1) Denaturation ⟶ Extension ⟶ Annealing
(2) Denaturation ⟶ Annealing ⟶ Extension
(3) Annealing ⟶ Denaturation ⟶ Extension
(4) Extension ⟶ Annealing ⟶ Denaturation

Scan or tap for the full solution

Q.3 Which of the following statements are correct with respect to DNA separation, isolation and visualization?

A. The cutting of DNA is done by molecular scissors.
B. The DNA fragments separate according to their size in an agarose gel, upon electrophoresis.
C. The separated DNA fragments can be seen without staining when exposed to UV light.
D. The separated DNA fragments, when stained with ethidium bromide, can be seen in visible light.

Choose the correct answer from the options given below : [NEET (UG) 2026]

(1) A and B only (2) B and D only
(3) A and D only (4) B and C only

Scan or tap for the full solution

Q.4 Insertion of a foreign DNA at BamHI site in an *E. coli* cloning vector pBR322 results in the loss of antibiotic resistance towards : [NEET (UG) 2026]

(1) Ampicillin and tetracycline
(2) Ampicillin
(3) Tetracycline
(4) Gentamycin

Solution

Q.5 Given below are two statements: one is labelled as **Assertion (A)** and the other is labelled as **Reason (R)**.

Assertion (A): In recombinant DNA technology, lysozyme is used for disrupting bacterial cells while cellulase is for plant cells.

Reason (R): Isolation of genetic material needs disruption of cells.

In the light of the above statements, choose the most appropriate answer from the options given below: [RE-NEET (UG) 2026]

(1) A is not correct but R is correct
(2) Both A and R are correct and R is the correct explanation of A
(3) Both A and R are correct but R is not the correct explanation of A
(4) A is correct but R is not correct

Scan or tap for the full solution

Q.6 Match **List-I** with **List-II**. [RE-NEET (UG) 2026]

List-I		List-II	
A.	Transformation	I.	Restriction enzyme
B.	Cloning site	II.	Transfer DNA to host bacteria
C.	Selection	III.	Replication
D.	Ori	IV.	Antibiotic

(1) A-IV, B-I, C-III, D-II
(2) A-II, B-I, C-IV, D-III
(3) A-I, B-II, C-IV, D-III
(4) A-III, B-IV, C-II, D-I

Solution

Q.7 Given below are two statements:

Statement-I: Plasmids are autonomously replicating DNA.

Statement-II: Plasmids are extrachromosomal DNA.

In the light of the above statements, choose the most appropriate answer from the options given below: [RE-NEET (UG) 2026]

(1) Statement-I is incorrect but Statement-II is correct
(2) Both Statement-I and Statement-II are correct
(3) Both Statement-I and Statement-II are incorrect
(4) Statement-I is correct but Statement-II is incorrect

Scan or tap for the full solution

Q.8 During PCR, primers bind to the DNA strands in the _____ step. [RE-NEET (UG) 2026]

(1) ligation (2) denaturation
(3) extension (4) annealing

Scan or tap for the full solution

Q.9

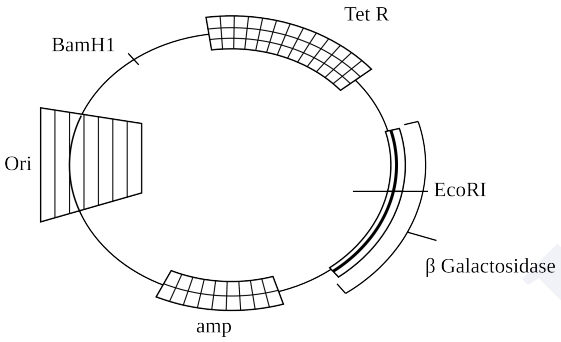

In the above represented plasmid, an alien piece of DNA is inserted at EcoRI site. Which of the following strategies will be chosen to select the recombinant colonies? [NEET (UG) 2025]

(1) White color colonies will be selected.
(2) Blue color colonies grown on ampicillin plates can be selected.
(3) Using ampicillin & tetracycline containing medium plate.
(4) Blue color colonies will be selected.

Scan or tap for the full solution

Q.10 Polymerase chain reaction (PCR) amplifies DNA following the equation. [NEET (UG) 2025]

(1) 2n + 1 (2) 2 N^2 (3) N^2 (4) 2^n

Scan or tap for the full solution

Q.11 Identify the part of a bio-reactor which is used as a foam breaker from the given figure. [NEET (UG) 2025]

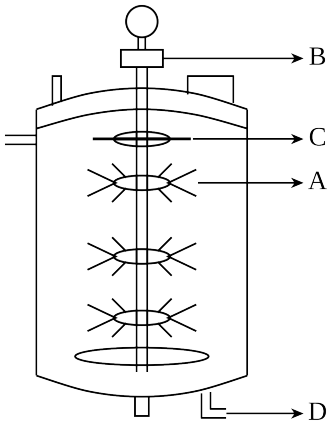

(1) D (2) C (3) A (4) B

Scan or tap for the full solution

Q.12 The blue and white selectable markers have been developed which differentiate recombinant colonies from non-recombinant colonies on the basis of their ability to produce colour in the presence of a chromogenic substrate.

Given below are two statements about this method:

Statement-I: The blue coloured colonies have DNA insert in the plasmid and they are identified as recombinant colonies.

Statement-II: The colonies without blue colour have DNA insert in the plasmid and are identified as recombinant colonies.

In the light of the above statements, choose the most appropriate answer from the options given below: [NEET (UG) 2025]

(1) Statement-I is correct but Statement-II is incorrect
(2) Statement-I is incorrect but Statement-II is correct
(3) Both Statement-I and Statement-II are correct
(4) Both Statement-I and Statement-II are incorrect

Scan or tap for the full solution

Q.13 Which of the following enzyme(s) are NOT essential for gene cloning?

A. Restriction enzymes B. DNA ligase
C. DNA mutase D. DNA recombinase
E. DNA polymerase

Choose the correct answer from the options given below: [NEET (UG) 2025]

(1) D and E only (2) B and C only
(3) C and D only (4) A and B only

Scan or tap for the full solution

Q.14 Given below are two statements:

Statement-I: The DNA fragments extracted from gel electrophoresis can be used in construction of recombinant DNA.

Statement-II: Smaller size DNA fragments are observed near anode while larger fragments are found near the wells in an agarose gel.

In the light of the above statements, choose the most appropriate answer from the options given below : [NEET (UG) 2025]

(1) Statement-I is correct but statement II is incorrect
(2) Statement-I is incorrect but statement II is correct
(3) Both statement I and statement II are correct
(4) Both statement I and statement II are incorrect

Scan or tap for the full solution

Q.15 Hind II always cuts DNA molecules at a particular point called recognition sequence and it consists of: [NEET (UG) 2024]

(1) 8 bp (2) 6 bp (3) 4 bp (4) 10 bp

Scan or tap for the full solution

Q.16 What is the fate of a piece of DNA carrying only gene of interest which is transferred into an alien organism?

A. The piece of DNA would be able to multiply itself independently in the progeny cells of the organism.
B. It may get integrated into the genome of the recipient.
C. It may multiply and be inherited along with the host DNA.
D. The alien piece of DNA is not an integral part of chromosome.
E. It shows ability to replicate.

Choose the correct answer from the options given below: [NEET (UG) 2024]

(1) A and B only (2) D and E only
(3) B and C only (4) A and E only

Scan or tap for the full solution

Q.17 The "Ti plasmid" of *Agrobacterium tumefaciens* stands for [NEET (UG) 2024]

(1) Tumour inhibiting plasmid
(2) Tumor independent plasmid
(3) Tumor inducing plasmid
(4) Temperature independent plasmid

Scan or tap for the full solution

Q.18 Which of the following statements is incorrect? [NEET (UG) 2024]

(1) A bio-reactor provides optimal growth conditions for achieving the desired product
(2) Most commonly used bio-reactors are of stirring type
(3) Bio-reactors are used to produce small scale bacterial cultures
(4) Bio-reactors have an agitator system, an oxygen delivery system and foam control system

Scan or tap for the full solution

Q.19 The following diagram shows restriction sites in *E. coli* cloning vector pBR322. Find the role of 'X' and 'Y' genes : [NEET (UG) 2024]

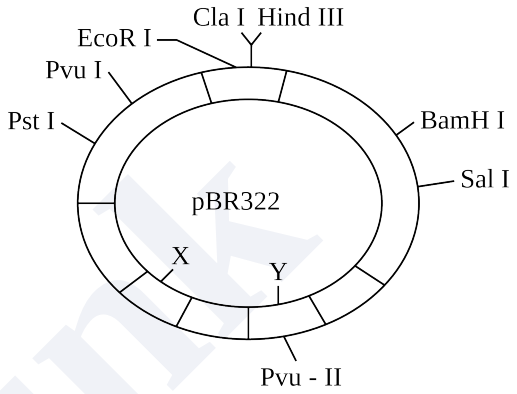

(1) The gene 'X' is responsible for resistance to antibiotics and 'Y' for protein involved in the replication of Plasmid.
(2) The gene 'X' is responsible for controlling the copy number of the linked DNA and 'Y' for protein involved in the replication of Plasmid.
(3) The gene 'X' is for protein involved in replication of Plasmid and 'Y' for resistance to antibiotics.
(4) Gene 'X' is responsible for recognition sites and 'Y' is responsible for antibiotic resistance.

Scan or tap for the full solution

Q.20 In a chromosome, there is a specific DNA sequence, responsible for initiating replication. It is called as: [RE-NEET (UG) 2024]

(1) Recognition sequence
(2) Cloning site
(3) Restriction site
(4) ori site

Solution

Q.21 Identify the incorrect statement related to gel electrophoresis. [RE-NEET (UG) 2024]

(1) Separated DNA fragments can be directly seen under UV radiation
(2) Separated DNA can be extracted from gel piece
(3) Fragment of DNA moves toward anode
(4) Sieving effect of agarose gel helps in separation of DNA fragments

Scan or tap for the full solution

Q.22 Recombinant DNA molecule can be created normally by cutting the vector DNA and source DNA respectively with: [RE-NEET (UG) 2024]

(1) Hind II, Hind II (2) Hind II, Alu I
(3) Hind II, EcoR I (4) Hind II, BamHI

Scan or tap for the full solution

Q.23 Select the restriction endonuclease enzymes whose restriction sites are present for the tetracycline resistance (tet^R) gene in the pBR322 cloning vector. [RE-NEET (UG) 2024]

(1) Bam HI and Sal I (2) Sal I and Pst I
(3) Pst I and Pvu I (4) Pvu I and Bam HI

Scan or tap for the full solution

Q.24 Which of the following are correct about EcoRI?

A. Cut the DNA with blunt end
B. Cut the DNA with sticky end
C. Recognise a specific palindromic sequence
D. Cut the DNA between the base G and A when encounters the DNA sequence 'GAATTC'
E. Exonuclease

Choose the correct answer from the options given below: [RE-NEET (UG) 2024]

(1) B, C, E only (2) A, D, E only
(3) A, C, D only (4) B, C, D only

Scan or tap for the full solution

Q.25 Following are the steps involved in the process of PCR.

A. Annealing
B. Amplification (~1 billion times)
C. Denaturation
D. Treatment with Taq polymerase and deoxynucleotides
E. Extension

Choose the correct sequence of steps of PCR from the options given below : [RE-NEET (UG) 2024]

(1) C ⟶ A ⟶ D ⟶ E ⟶ B
(2) A ⟶ B ⟶ E ⟶ D ⟶ C
(3) A ⟶ C ⟶ E ⟶ D ⟶ B
(4) D ⟶ B ⟶ E ⟶ C ⟶ A

Scan or tap for the full solution

Q.26 During the purification process for recombinant DNA technology, addition of chilled ethanol precipitates out [NEET (UG) 2023]

(1) DNA (2) Histones
(3) Polysaccharides (4) RNA

Scan or tap for the full solution

Q.27 In gene gun method used to introduce alien DNA into host cells, microparticles of _____ metal are used. [NEET (UG) 2023]

(1) Zinc (2) Tungsten or gold
(3) Silver (4) Copper

Scan or tap for the full solution

Q.28 Upon exposure to UV radiation, DNA stained with ethidium bromide will show [NEET (UG) 2023]

(1) Bright blue colour
(2) Bright yellow colour
(3) Bright orange colour
(4) Bright red colour

Solution

Q.29 Main steps in the formation of Recombinant DNA are given below. Arrange these steps in a correct sequence.

A. Insertion of recombinant DNA into the host cell
B. Cutting of DNA at specific location by restriction enzyme
C. Isolation of desired DNA fragment
D. Amplification of gene of interest using PCR

Choose the correct answer from the options given below : [NEET (UG) 2023]

(1) C, A, B, D (2) C, B, D, A
(3) B, D, A, C (4) B, C, D, A

Scan or tap for the full solution

Q.30 Which of the following is not a cloning vector? [NEET (UG) 2023]

(1) YAC (2) pBR322
(3) Probe (4) BAC

Scan or tap for the full solution

Q.31 Given below are two statements : one is labelled as **Assertion (A)** and the other is labelled as **Reason (R)**.

Assertion (A): Polymerase chain reaction is used in DNA amplification.

Reason (R): The ampicillin resistant gene is used as a selectable marker to check transformation.

In the light of the above statements, choose the correct answer from the options given below : [NEET (UG) 2022]

(1) Both (A) and (R) are correct and (R) is the correct explanation of (A)
(2) Both (A) and (R) are correct but (R) is not the correct explanation of (A)
(3) (A) is correct but (R) is not correct
(4) (A) is not correct but (R) is correct

Scan or tap for the full solution

Q.32 Which one of the following statements is not true regarding gel electrophoresis technique? [NEET (UG) 2022]

(1) The process of extraction of separated DNA strands from gel is called elution.

(2) The separated DNA fragments are stained by using ethidium bromide.

(3) The presence of chromogenic substrate gives blue coloured DNA bands on the gel.

(4) Bright orange coloured bands of DNA can be observed in the gel when exposed to UV light.

Scan or tap for the full solution

Q.33 In the following palindromic base sequences of DNA, which one can be cut easily by particular restriction enzyme? [NEET (UG) 2022]

(1) 5'GATACT3' ; 3'CTATGA5'

(2) 5'GAATTC3' ; 3'CTTAAG5'

(3) 5'CTCAGT3' ; 3'GAGTCA5'

(4) 5'GTATTC3' ; 3'CATAAG5'

Solution

Q.34 Given below are two statements:

Statement-I: Restriction endonucleases recognise specific sequence to cut DNA known as palindromic nucleotide sequence.

Statement-II: Restriction endonucleases cut the DNA strand a little away from the centre of the palindromic site.

In the light of the above statements, choose the most appropriate answer from the options given below : [NEET (UG) 2022]

(1) Both Statement-I and Statement-II are correct

(2) Both Statement-I and Statement-II are incorrect

(3) Statement-I is correct but Statement-II is incorrect

(4) Statement-I is incorrect but Statement-II is correct

Scan or tap for the full solution

Q.35 Which of the following is not a desirable feature of a cloning vector? [NEET (UG) 2022]

(1) Presence of origin of replication

(2) Presence of a marker gene

(3) Presence of single restriction enzyme site

(4) Presence of two or more recognition sites

Scan or tap for the full solution

Q.36 Given below are two statements: one is labelled as **Assertion (A)** and the other is labelled as **Reason (R)**.

Assertion (A): When a particular restriction enzyme cuts strand of DNA, overhanging stretches or sticky ends are formed.

Reason (R): Some restriction enzymes cut the strand of DNA a little away from the centre of palindromic site.

In the light of the above statements, choose the correct answer from the options given below : [NEET (UG) 2022 (Phase 2)]

(1) (A) is not correct but (R) is correct

(2) Both (A) and (R) are correct and (R) is the correct explanation of (A)

(3) Both (A) and (R) are correct but (R) is not the correct explanation of (A)

(4) (A) is correct but (R) is not correct

Scan or tap for the full solution

Q.37 Separation of DNA fragments is done by a technique known as [NEET (UG) 2022 (Phase 2)]

(1) Gel electrophoresis

(2) Polymerase Chain Reaction

(3) Recombinant technology

(4) Southern blotting

Solution

Q.38 The enzyme (a) is needed for isolating genetic material from plant cells and enzyme (b) for isolating genetic material from fungus. Choose the correct pair of options from the following : [NEET (UG) 2022 (Phase 2)]

(1) (a) Cellulase (b) Lipase

(2) (a) Cellulase (b) Protease

(3) (a) Cellulase (b) Chitinase

(4) (a) Chitinase (b) Lipase

Solution

Q.39 Match **List-I** with **List-II** :

List - I		List - II	
a.	Gene gun	i.	Replacement of a faulty gene by a normal healthy gene
b.	Gene therapy	ii.	Used for transfer of gene
c.	Gene cloning	iii.	Total DNA in the cells of an organism
d.	Genome	iv.	To obtain identical copies of a particular DNA molecule

Choose the correct answer from the options given below: [NEET (UG) 2022 (Phase 2)]

(1) (a)-(ii), (b)-(iii), (c)-(iv), (d)-(i)

(2) (a)-(ii), (b)-(i), (c)-(iv), (d)-(iii)

(3) (a)-(i), (b)-(iii), (c)-(ii), (d)-(iv)

(4) (a)-(iv), (b)-(i), (c)-(iii), (d)-(ii)

Solution

Q.40 Which of the following methods is not commonly used for introducing foreign DNA into the plant cell? [NEET (UG) 2022 (Phase 2)]

(1) Bacteriophages
(2) *Agrobacterium* mediated transformation
(3) Gene gun
(4) 'Disarmed pathogen' vectors

Scan or tap for the full solution

Q.41 Refer to the following statements for agarose-gel electrophoresis:
A. Agarose is a natural polymer obtained from sea-weed.
B. The separation of DNA molecules in agarose-gel electrophoresis depends on the size of DNA.
C. The DNA migrates from negatively-charged electrode to the positively-charged electrode.
D. The DNA migrates from positively-charged electrode to the negatively-charged electrode.
Choose the most appropriate answer from the options given below : [NEET (UG) 2022 (Phase 2)]
(1) B, C and D only (2) A and B only
(3) A, B and C only (4) A, B and D only

Scan or tap for the full solution

Q.42 During the purification process for recombinant DNA technology, addition of chilled ethanol precipitates out : [NEET (UG) 2021]
(1) Polysaccharides (2) RNA
(3) DNA (4) Histones

Scan or tap for the full solution

Q.43 DNA strands on a gel stained with ethidium bromide when viewed under UV radiation, appear as [NEET (UG) 2021]
(1) Bright blue bands (2) Yellow bands
(3) Bright orange bands (4) Dark red bands

Scan or tap for the full solution

Q.44 Which of the following is a correct sequence of steps in a PCR (Polymerase Chain Reaction)? [NEET (UG) 2021]
(1) Annealing, Denaturation, Extension
(2) Denaturation, Annealing, Extension
(3) Denaturation, Extension, Annealing
(4) Extension, Denaturation, Annealing

Scan or tap for the full solution

Q.45 Plasmid pBR322 has Pst I restriction enzyme site within gene amp^R that confers ampicillin resistance. If this enzyme is used for inserting a gene for β-galactosidase production and the recombinant plasmid is inserted in an *E. coli* strain [NEET (UG) 2021]
(1) It will be able to produce a novel protein with dual ability
(2) It will not be able to confer ampicillin resistance to the host cell
(3) The transformed cells will have the ability to resist ampicillin as well as produce β-galactosidase
(4) It will lead to lysis of host cell

Scan or tap for the full solution

Q.46 During the process of gene amplification using PCR, if very high temperature is not maintained in the beginning, then which of the following steps of PCR will be affected first? [NEET (UG) 2021]
(1) Ligation (2) Annealing
(3) Extension (4) Denaturation

Scan or tap for the full solution

Q.47 A specific recognition sequence identified by endonucleases to make cuts at specific positions within the DNA is : [NEET (UG) 2021]
(1) Poly (A) tail sequences
(2) Degenerate primer sequence
(3) Okazaki sequences
(4) Palindromic Nucleotide sequences

Scan or tap for the full solution

Q.48 In gel electrophoresis, separated DNA fragments can be visualized with the help of [NEET (UG) 2020]
(1) Ethidium bromide in infrared radiation
(2) Ethidium bromide in UV radiation
(3) Acetocarmine in bright blue light
(4) Acetocarmine in UV radiation

Scan or tap for the full solution

Q.49 Identify the wrong statement with regard to Restriction Enzymes [NEET (UG) 2020]
(1) Sticky ends can be joined by using DNA ligases.
(2) They cut the strand of DNA at palindromic sites.
(3) Each restriction enzyme functions by inspecting the length of a DNA sequence.
(4) They are useful in genetic engineering

Scan or tap for the full solution

Q.50 The specific palindromic sequence which is recognized by EcoRI is [NEET (UG) 2020]

(1) 5′ - GGATCC - 3′
3′ - CCTAGG - 5′

(2) 5′ - GAATTC - 3′
3′ - CTTAAG - 5′

(3) 5′ - GGAACC - 3′
3′ - CCTTGG - 5′

(4) 5′ - CTTAAG - 3′
3′ - GAATTC - 5′

Solution

Q.51 The sequence that controls the copy number of the linked DNA in the vector, is termed [NEET (UG) 2020]

(1) Recognition site (2) Ori site
(3) Selectable marker (4) Palindromic sequence

Scan or tap for the full solution

Q.52 Match the organism with its use in biotechnology

Column-I		Column-II	
a.	*Bacillus thuringiensis*	i.	Cloning vector
b.	*Thermus aquaticus*	ii.	Construction of first rDNA molecule
c.	*Agrobacterium tumefaciens*	iii.	DNA polymerase
d.	*Salmonella typhimurium*	iv.	Cry proteins

Select the correct option from the following: [NEET (UG) 2020]

(1) (a)-(iii), (b)-(iv), (c)-(i), (d)-(ii)
(2) (a)-(ii), (b)-(iv), (c)-(iii), (d)-(i)
(3) (a)-(iv), (b)-(iii), (c)-(i), (d)-(ii)
(4) (a)-(iii), (b)-(ii), (c)-(iv), (d)-(i)

Solution

Q.53 Choose the correct pair from the following [NEET (UG) 2020]

(1) Exonucleases – Make cuts at specific positions within DNA
(2) Ligases – Join the two DNA molecules
(3) Polymerases – Break the DNA into fragments
(4) Nucleases – Separate the two strands of DNA

Scan or tap for the full solution

Q.54 DNA precipitation out of a mixture of biomolecules can be achieved by treatment with : [NEET (UG) 2019]

(1) Methanol at room temperature
(2) Chilled chloroform
(3) Isopropanol
(4) Chilled ethanol

Solution

Q.55 Following statements describe the characteristics of the enzyme Restriction Endonuclease. Identify the **incorrect** statement. [NEET (UG) 2019]

(1) The enzyme cuts the sugar-phosphate backbone at specific sites on each strand
(2) The enzyme recognizes a specific palindromic nucleotide sequence in the DNA
(3) The enzyme cuts DNA molecule at identified position within the DNA
(4) The enzyme binds DNA at specific sites and cuts only one of the two strands

Scan or tap for the full solution

Q.56 Which one of the following equipments is essentially required for growing microbes on a large scale, for industrial production of enzymes? [NEET (UG) 2019]

(1) Industrial oven (2) Bioreactor
(3) BOD incubator (4) Sludge digester

Scan or tap for the full solution

Q.57 The correct order of steps in Polymerase Chain Reaction (PCR) is [NEET 2018]

(1) extension, denaturation, annealing
(2) annealing, extension, denaturation
(3) denaturation, extension, annealing
(4) denaturation, annealing, extension

Scan or tap for the full solution

Q.58 The DNA fragments separated on an agarose gel can be visualised after staining with [NEET 2017]

(1) Bromophenol blue (2) Aniline blue
(3) Ethidium bromide (4) Acetocarmine

Scan or tap for the full solution

Q.59 DNA fragments are [NEET 2017]

(1) Positively charged
(2) Either positively or negatively charged depending on their size
(3) Neutral
(4) Negatively charged

Scan or tap for the full solution

Q.60 A gene whose expression helps to identify transformed cell is known as [NEET 2017]

(1) Selectable marker (2) Plasmid
(3) Vector (4) Structural gene

Scan or tap for the full solution

Q.61 What is the criterion for DNA fragments movement on agarose gel during gel electrophoresis ? [NEET 2017]

(1) Positively charged fragments move to farther end
(2) Negatively charged fragments do not move
(3) The smaller the fragment size, the farther it moves
(4) The larger the fragment size, the farther it moves

Scan or tap for the full solution

Q.62 The process of separation and purification of expressed protein before marketing is called : [NEET 2017]

(1) Upstream processing
(2) Bioprocessing
(3) Downstream processing
(4) Postproduction processing

Solution

Q.63 Which of the following is not a feature of the plasmids ? [NEET 2016 (Phase 1)]

(1) Single-stranded
(2) Transferable
(3) Independent replication
(4) Circular structure

Solution

Q.64 The taq polymerase enzyme is obtained from [NEET 2016 (Phase 1)]

(1) *Thermus aquaticus*
(2) *Bacillus subtilis*
(3) *Pseudomonas putida*
(4) *Thiobacillus ferrooxidans*

Solution

Q.65 Which of the following is a restriction endonuclease ? [NEET 2016 (Phase 1)]

(1) DNase I (2) Hind II
(3) RNase I (4) Protease

Scan or tap for the full solution

Q.66 Stirred-tank bioreactors have been designed for - [NEET 2016 (Phase 2)]

(1) ensuring anaerobic conditions in the culture vessel
(2) addition of preservatives to the product
(3) purification of product
(4) availability of oxygen throughout the process

Scan or tap for the full solution

Q.67 A foreign DNA and plasmid cut by the same restriction endonuclease can be joined to form a recombinant plasmid using [NEET 2016 (Phase 2)]

(1) Eco RI (2) Polymerase III
(3) Ligase (4) Taq polymerase

Scan or tap for the full solution

Q.68 Which of the following is not a component of downstream processing ? [NEET 2016 (Phase 2)]

(1) Purification (2) Expression
(3) Preservation (4) Separation

Scan or tap for the full solution

Q.69 Which of the following restriction enzymes produces blunt ends ? [NEET 2016 (Phase 2)]

(1) Eco RV (2) Hind III
(3) Xho I (4) Sal I

Scan or tap for the full solution

Q.70 The DNA molecule to which the gene of interest is integrated for cloning is called - [AIPMT 2015]

(1) Transformer (2) Template
(3) Vector (4) Carrier

Scan or tap for the full solution

Q.71 The cutting of DNA at specific locations became possible with the discovery of - [AIPMT 2015]

(1) Restriction enzymes (2) Selectable markers
(3) Probes (4) Ligases

Scan or tap for the full solution

Q.72 The introduction of T-DNA into plants involves - [AIPMT 2015]

(1) Altering the pH of the soil, then heat-shocking the plants
(2) Infection of the plant by *Agrobacterium tumefaciens*
(3) Exposing the plants to cold for a brief period
(4) Allowing the plant roots to stand in water

Scan or tap for the full solution

Q.73 Which vector can clone only a small fragment of DNA ? [AIPMT 2014]

(1) Cosmid
(2) Bacterial artificial chromosome
(3) Yeast artificial chromosome
(4) Plasmid

Solution

Q.74 The colonies of recombinant bacteria appear white in contrast to blue colonies of non-recombinant bacteria because of : [NEET 2013]

(1) Insertional inactivation of alphagalactosidase in recombinant bacteria

(2) Inactivation of glycosidase enzyme in recombinant bacteria
(3) Insertional inactivation of alphagalactosidase in non-recombinant bacteria
(4) Non-recombinant bacteria containing betagalactosidase

Scan or tap for the full solution

Q.75 DNA fragments generated by the restriction endonucleases in a chemical reaction can be separated by : [NEET 2013]
(1) Polymerase chain reaction
(2) Restriction mapping
(3) Electrophoresis
(4) Centrifugation

Solution

Q.76 Which of the following is not correctly matched for the organism and its cell wall degrading enzyme ? [NEET 2013]
(1) Plant cells- Cellulase
(2) Algae-Methylase
(3) Fungi - Chitinase
(4) Bacteria-Lysozyme

Solution

Q.77 Genes of interest can be selected from a genomic library by using : [NEET 2013 (Karnataka)]
(1) Restriction enzymes (2) Gene targets
(3) Cloning vectors (4) DNA probes

Scan or tap for the full solution

Q.78 During the process of isolation of DNA, chilled ethanol is added to : [NEET 2013 (Karnataka)]
(1) Break open the cell to release DNA
(2) Remove proteins such as histones
(3) Facilitate action of restriction enzymes
(4) Precipitate DNA

Scan or tap for the full solution

Q.79 Biolistics (gene-gun) is suitable for [AIPMT 2012 (Mains)]
(1) DNA finger printing
(2) Constructing recombinant DNA by joining with vectors
(3) Disarming pathogen vectors
(4) Transformation of plant cells

Scan or tap for the full solution

Q.80 In genetic engineering, the antibiotics are used [AIPMT 2012 (Mains)]
(1) As sequences from where replication starts
(2) As selectable markers
(3) To keep the cultures free of infection
(4) To select healthy vectors

Scan or tap for the full solution

Q.81 Which one of the following represents a palindromic sequence in DNA ? [AIPMT 2012 (Mains)]
(1) 5′-GAATTC-3′
3′-CTTAAG-5′
(2) 5′-GATACC-3′
3′-CCTAAG-5′
(3) 5′-CCAATG-3′
3′-GAATCC-5′
(4) 5′-CATTAG-3′
3′-GATAAC-5′

Solution

Q.82 The figure below shows three steps (A, B, C) of Polymerase Chain Reaction (PCR). Select the option giving correct identification together with what it represents ? [AIPMT 2012 (Mains)]

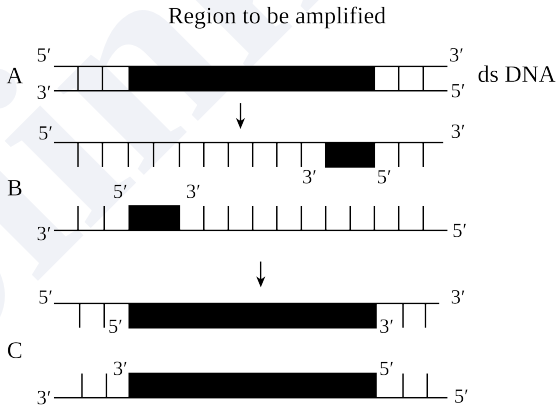

(1) C - Extension in the presence of heat stable DNA polymerase
(2) B - Denaturation at a temperature of about 98°C separating the two DNA strands
(3) A - Denaturation at a temperature of about 50°C
(4) A - Annealing with two sets of primers

Scan or tap for the full solution

Q.83 The figure below is the diagrammatic representation of the *E. coli* vector pBR322. Which one of the given options correctly identifies its certain component(s)? [AIPMT 2012 (Prelims)]

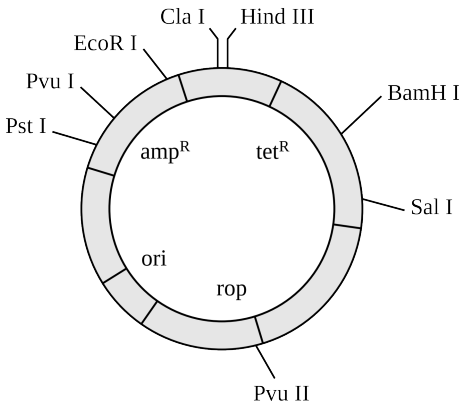

(1) ori - original restriction enzyme
(2) amp^R, tet^R - antibiotic resistance genes
(3) rop - reduced osmotic pressure
(4) Hind III, EcoR I - selectable markers

Scan or tap for the full solution

Q.84 Which one is a true statement regarding DNA polymerase used in PCR? [AIPMT 2012 (Prelims)]
(1) It is used to ligate introduced DNA in recipient cell
(2) It remains active at high temperature
(3) It serves as a selectable marker
(4) It is isolated from a virus

Scan or tap for the full solution

Q.85 For transformation, microparticles coated with DNA to be bombarded with gene gun are made up of [AIPMT 2012 (Prelims)]
(1) Gold or tungsten (2) Platinum or zinc
(3) Silver or platinum (4) Silicon or platinum

Scan or tap for the full solution

Q.86 Which one of the following techniques made it possible to genetically engineer living organisms? [AIPMT 2011 (Mains)]
(1) Recombinant DNA techniques
(2) X-ray diffraction
(3) Heavier isotope labeling
(4) Hybridization

Solution

Q.87 Read the following four statements (A-D) with certain mistakes in two of them. Which are the two statements having mistakes?
A. The first transgenic buffalo, Rosie produced milk which was human alpha-lactalbumin enriched.
B. Restriction enzymes are used in isolation of DNA from other macro-molecules
C. Downstream processing is one of the steps of R-DNA technology
D. Disarmed pathogen vectors are also used in transfer of R-DNA into the host
[AIPMT 2011 (Mains)]
(1) Statements (B) and (C)
(2) Statements (A) and (C)
(3) Statements (A) and (B)
(4) Statements (C) and (D)

Solution

Q.88 Given below is a sample of a portion of DNA strand giving the base sequence on the opposite strands. What is so special shown in it ?
5' ..... GAATTC ..... 3'
3' ..... CTTAAG ..... 5'
[AIPMT 2011 (Prelims)]
(1) Start codon at the 5' end
(2) Replication completed
(3) Deletion mutation
(4) Palindromic sequence of base pairs

Scan or tap for the full solution

Q.89 There is a restriction endonuclease called EcoRI. What does "co" part in it stand for ? [AIPMT 2011 (Prelims)]
(1) colon (2) coelom
(3) coenzyme (4) coli

Solution

Q.90 Agarose extracted from sea weeds finds use in : [AIPMT 2011 (Prelims)]
(1) Spectrophotometry (2) PCR
(3) Tissue Culture (4) Gel electrophoresis

Scan or tap for the full solution

Q.91 In genetic engineering, a DNA segment (gene) of interest, is transferred to the host cell through a vector. Consider the following four agents (A-D) in this regard and select the correct option about which one or more of these can be used as a vector / vectors –
A. a bacterium B. plasmid
C. *Plasmodium* D. bacteriophage
[AIPMT 2010 (Mains)]
(1) B and D only (2) A and C only
(3) A, B and D only (4) A only

Scan or tap for the full solution

Q.92 Which one of the following palindromic base sequences in DNA can be easily cut at about the middle by some particular restriction enzyme? [AIPMT 2010 (Prelims)]
(1) 5′ —— CGTTCG —— 3′
3′ —— ATGGTA —— 5′
(2) 5′ —— GAATTC —— 3′
3′ —— CTTAAG —— 5′
(3) 5′ —— CACGTA —— 3′
3′ —— CTCAGT —— 5′
(4) 5′ —— GATATG —— 3′
3′ —— CTACTA —— 5′

Solution

Q.93 Which one of the following is used as vector for cloning genes into higher organisms ? [AIPMT 2010 (Prelims)]
(1) Retrovirus
(2) *Salmonella typhimurium*
(3) *Rhizopus nigricans*
(4) Baculovirus

Solution

Q.94 Restriction endonucleases are enzymes which – [AIPMT 2010 (Prelims)]

(1) recognize a specific nucleotide sequence for binding of DNA ligase
(2) remove nucleotides from the ends of the DNA molecule
(3) restrict the action of the enzyme DNA polymerase
(4) make cuts at specific positions within the DNA molecule

Scan or tap for the full solution

Q.95 Stirred-tank bioreactors have been designed for – [AIPMT 2010 (Prelims)]

(1) Purification of the product
(2) Availability of oxygen throughout the process
(3) Ensuring anaerobic conditions in the culture vessel
(4) Addition of preservatives to the product

Scan or tap for the full solution

Q.96 Which of the following are used in gene cloning ? [AIPMT 2010 (Prelims)]

(1) Mesosomes (2) Nucleoids
(3) Lomasomes (4) Plasmids

Scan or tap for the full solution

Q.97 Polyethylene glycol method is used for: [AIPMT 2009]

(1) Biodiesel production
(2) Seedless fruit production
(3) Energy production from sewage
(4) Gene transfer without a vector

Solution

Q.98 Which one of the following is commonly used in transfer of foreign DNA into crop plants? [AIPMT 2009]

(1) *Trichoderma harzianum*
(2) *Meloidogyne incognita*
(3) *Agrobacterium tumefaciens*
(4) *Penicillium expansum*

Solution

Q.99 Gel electrophoresis is used for: [AIPMT 2008]

(1) cutting of DNA into fragments
(2) separation of DNA fragments according to their size
(3) construction of recombinant DNA by joining with cloning vectors
(4) isolation of DNA molecule

Scan or tap for the full solution

Q.100 The linking of antibiotic resistance gene with the plasmid vector became possible with: [AIPMT 2008]

(1) Exonucleases (2) Endonucleases
(3) DNA ligase (4) DNA polymerase

Scan or tap for the full solution

Q.101 A genetically engineered micro-organism used successfully in bioremediation of oil spills is a species of- [AIPMT 2007]

(1) *Trichoderma* (2) *Xanthomonas*
(3) *Bacillus* (4) *Pseudomonas*

Scan or tap for the full solution

Q.102 Restriction endonuclease - [AIPMT 2006]

(1) Cuts the DNA molecule at specific sites
(2) Synthesizes DNA
(3) Restricts the synthesis of DNA inside the nucleus
(4) Cuts the DNA molecule randomly

Scan or tap for the full solution

Q.103 Two microbes found to be very useful in genetic engineering are- [AIPMT 2006]

(1) *Diplococcus* sp. and *Pseudomonas* sp.
(2) *Vibrio cholerae* and a tailed bacteriophage
(3) Crown gall bacterium and *Caenorhabditis elegans*
(4) *Escherichia coli* and *Agrobacterium tumefaciens*

Solution

Q.104 Which one of the following hydrolyses internal phosphodiester bonds in a polynucleotide chain? [AIPMT 2005]

(1) Protease (2) Endonuclease
(3) Lipase (4) Exonuclease

Scan or tap for the full solution

Q.105 The most thoroughly studied of the known bacteria-plant interactions is the :- [AIPMT 2004]

(1) Nodulation of *Sesbania* stems by nitrogen fixing bacteria
(2) Cyanobacterial symbiosis with some aquatic ferns
(3) Plant growth stimulation by phosphate-solubilising bacteria
(4) Gall formation on certain angiosperms by *Agrobacterium*

Scan or tap for the full solution

Q.106 Restriction endonucleases :- [AIPMT 2004]

(1) Are used for in vitro DNA synthesis

(2) Are present in mammalian cells for degradation of DNA when the cell dies
(3) Are synthesized by bacteria as part of their defense mechanism
(4) Are used in genetic engineering for ligating two DNA molecules

Scan or tap for the full solution

Q.107 In transgenics expression of transgene in target tissue is determined by :- [AIPMT 2004]
(1) Enhancer (2) Promoter
(3) Reporter (4) Transgene

Scan or tap for the full solution

Q.108 The Ti plasmid is often used for making transgenic plants. This plasmid is found in [AIPMT 2004]
(1) Agrobacterium
(2) Rhizobium of the roots of leguminous plants
(3) Azotobacter
(4) Yeast as a 2 µm plasmid

Scan or tap for the full solution

Q.109 Which one of the following bacteria has found extensive use in genetic engineering work in plants ? [AIPMT 2003]
(1) *Xanthomonas citri*
(2) *Agrobacterium tumefaciens*
(3) *Bacillus coagulans*
(4) *Clostridium septicum*

Solution

Q.110 Which of the following enzymes are used to join bits of DNA ? [AIPMT 2002]
(1) Endonuclease (2) DNA polymerase
(3) Ligase (4) Primase

Scan or tap for the full solution

Q.111 Manipulation of DNA in genetic engineering became possible due to the discovery of : - [AIPMT 2002]
(1) Transcriptase
(2) DNA ligase
(3) Primase
(4) Restriction endonuclease

Solution

Q.112 Which of the following cuts the DNA from specific places? [AIPMT 2001]
(1) Exonuclease
(2) Alkaline phosphatase
(3) *E. coli* restriction endonuclease I
(4) Ligase

Scan or tap for the full solution

Q.113 Maximum number of bases in plasmids discovered so far: [AIPMT 2001]
(1) 500 kilobases (2) 5 kilobases
(3) 50 kilobases (4) 5000 kilobases

Scan or tap for the full solution

Q.114 The bacteria generally used for genetic engineering is: [AIPMT 2000]
(1) *Clostridium* (2) *Pseudomonas*
(3) *Agrobacterium* (4) *Bacillus*

Scan or tap for the full solution

Q.115 Plasmid has been used as vector because: [AIPMT 2000]
(1) Both ends show replication
(2) It has antibiotic resistance gene
(3) It is circular DNA which has capacity to join to eukaryotic DNA
(4) It can move between prokaryotic and eukaryotic cells

Scan or tap for the full solution

ANSWER KEY

Ques.	1	2	3	4	5	6	7
Ans.	**1**	**2**	**1**	**3**	**2**	**2**	**2**
Ques.	8	9	10	11	12	13	14
Ans.	**4**	**1**	**4**	**2**	**2**	**3**	**3**
Ques.	15	16	17	18	19	20	21
Ans.	**2**	**3**	**3**	**3**	**2**	**4**	**1**
Ques.	22	23	24	25	26	27	28
Ans.	**1**	**1**	**4**	**1**	**1**	**2**	**3**
Ques.	29	30	31	32	33	34	35
Ans.	**4**	**3**	**2**	**3**	**2**	**1**	**4**
Ques.	36	37	38	39	40	41	42
Ans.	**2**	**1**	**3**	**2**	**1**	**3**	**3**
Ques.	43	44	45	46	47	48	49
Ans.	**3**	**2**	**2**	**4**	**4**	**2**	**3**
Ques.	50	51	52	53	54	55	56
Ans.	**2**	**2**	**3**	**2**	**4**	**4**	**2**
Ques.	57	58	59	60	61	62	63
Ans.	**4**	**3**	**4**	**1**	**3**	**3**	**1**
Ques.	64	65	66	67	68	69	70
Ans.	**1**	**2**	**4**	**3**	**2**	**1**	**3**
Ques.	71	72	73	74	75	76	77
Ans.	**1**	**2**	**4**	**4**	**3**	**2**	**4**
Ques.	78	79	80	81	82	83	84
Ans.	**4**	**4**	**2**	**1**	**1**	**2**	**2**
Ques.	85	86	87	88	89	90	91
Ans.	**1**	**1**	**3**	**4**	**4**	**4**	**1**
Ques.	92	93	94	95	96	97	98
Ans.	**2**	**1**	**4**	**2**	**4**	**4**	**3**

Ques.	99	100	101	102	103	104	105
Ans.	**2**	**3**	**4**	**1**	**4**	**2**	**4**
Ques.	106	107	108	109	110	111	112
Ans.	**3**	**3**	**1**	**2**	**3**	**4**	**3**
Ques.	113	114	115				
Ans.	**3**	**3**	**3**				

Prepblink