PYQSide PYQSide.com — free PYQs with solutions Powered by PrepBlink

JEE MAIN CURRENT ELECTRICITY — WHEATSTONE BRIDGE AND METRE BRIDGE — PYQS

Max. Marks: 28 **Questions:** 7

Section A (MCQ) — 4 questions

Q.1 A Wheatstone bridge is initially at room temperature and all arms of the bridge have same value of resistances ($R_1 = R_2 = R_3 = R_4$). When R_3 resistance is heated to some temperature, its resistance value has gone up by 10%. The potential difference ($V_a - V_b$) (after R_3 is heated) is _____ V.

[JEE Main 2026 (Online) 28th January Evening Shift]

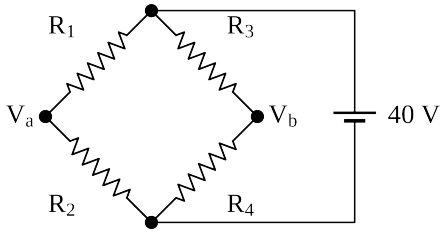

(1) 1.05 (2) 0.95 (3) 0 (4) 2

Scan or tap for the full solution

Q.2 Two resistors 2 Ω and 3 Ω are connected in the gaps of bridge as shown in figure. The null point is obtained with the contact of jockey at some point on wire XY. When an unknown resistor is connected in parallel with 3 Ω resistor, the null point is shifted by 22.5 cm toward Y. The resistance of unknown resistor is _____ Ω.

[JEE Main 2026 (Online) 24th January Morning Shift]

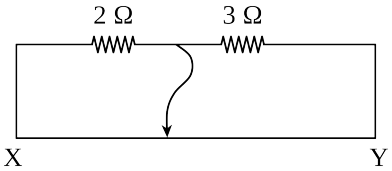

(1) 3 (2) 1 (3) 4 (4) 2

Scan or tap for the full solution

Q.3 A meter bridge with two resistances R_1 and R_2 as shown in figure was balanced (null point) at 40 cm from the point P. The null point changed to 50 cm from the point P, when 16 Ω resistance is connected in parallel to R_2. The values of resistances R_1 and R_2 are _____.

[JEE Main 2026 (Online) 22nd January Morning Shift]

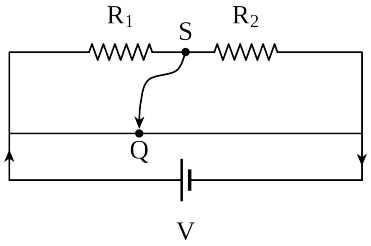

(1) $R_2 = 8\ \Omega,\ R_1 = \frac{16}{3}\ \Omega$

(2) $R_2 = 12\ \Omega,\ R_1 = \frac{12}{3}\ \Omega$

(3) $R_2 = 4\ \Omega,\ R_1 = \frac{4}{3}\ \Omega$

(4) $R_2 = 16\ \Omega,\ R_1 = \frac{16}{3}\ \Omega$

Scan or tap for the full solution

Q.4 The total length of potentiometer wire AB is 50 cm in the arrangement as shown in the figure. If P is the point where the galvanometer shows zero reading then the length AP is _____ cm.

[JEE Main 2026 (Online) 21st January Evening Shift]

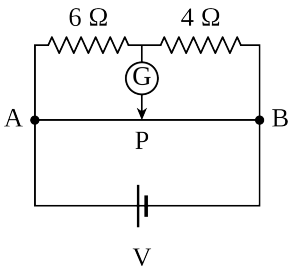

(1) 25 (2) 30 (3) 15 (4) 20

Scan or tap for the full solution

Section B (Numerical) — 3 questions

Q.5 In a meter bridge experiment to determine the value of unknown resistance, first the resistances 2 Ω and 3 Ω are connected in the left and right gaps of the bridge and the null point is obtained at a distance l cm from the left. Now when an unknown resistance x Ω is connected in parallel to 3 Ω resistance, the null point is shifted by 10 cm to the right of wire. The value of unknown resistance x is _____ Ω.

[JEE Main 2026 (Online) 24th January Evening Shift]

Scan or tap for the full solution

Q.6 The heat generated in 1 minute between points A and B in the given circuit, when a battery of 9 V with internal resistance of 1 Ω is connected across these points is _____ J.

[JEE Main 2026 (Online) 21st January Morning Shift]

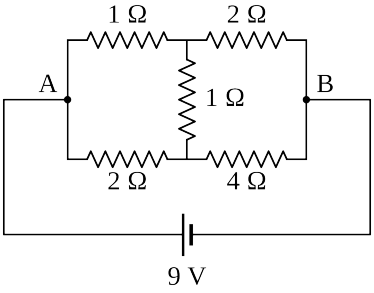

Scan or tap for the full solution

Q.7 The value of current I in the electrical circuit as given below, when potential at A is equal to the potential at B, will be _____ A.

[JEE Main 2025 (Online) 28th January Evening Shift]

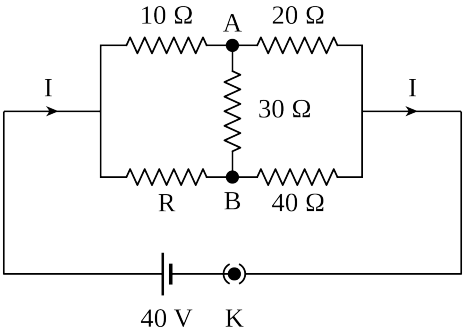

Scan or tap for the full solution

ANSWER KEY

Section A (MCQ) — 4 questions

Ques.	1	2	3	4							
Ans.	**2**	**4**	**1**	**2**							

Section B (Numerical) — 3 questions

Ques.	5	6	7				
Ans.	**6**	**1080**	**2**				