PART 1 - PHYSICS

Topic : Experimental skills (physics)

SECTION–1 : (Maximum Marks : 3)

- This section contains **ONE** question.
- Each question has **FOUR** options (A), (B), (C) and (D). **ONLY ONE** of these four options is the correct answer.
- For each question, choose the option corresponding to the correct answer.
- Answer to each question will be evaluated according to the following marking scheme :

Full Marks	: +3	If ONLY the correct option is chosen;
Zero Marks	: 0	If none of the options is chosen (i.e. the question is unanswered);
Negative Marks	: −1	In all other cases.

1. Figure 1 shows the configuration of main scale and Vernier scale before measurement. Fig. 2 shows the configuration corresponding to the measurement of diameter D of a tube. The measured value of D is:

[JEE Advanced 2025 Paper 1]

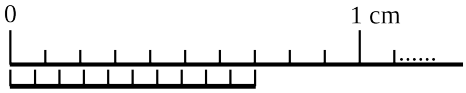

Fig. 1

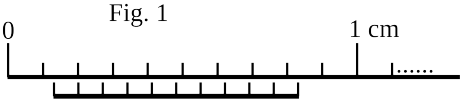

Fig. 2

(A) 0.12 cm (B) 0.11 cm (C) 0.13 cm (D) 0.14 cm

Scan or tap for the full solution

Space for Rough Work

SECTION–2 : (Maximum Marks : 8)

- This section contains **TWO** questions.
- The answer to each question is a **NUMERICAL VALUE**.
- For each question, enter the correct numerical value of the answer (in decimal notation, truncated / rounded-off to the **SECOND DECIMAL PLACE**; e.g. 6.25, 7.00, −0.33, −.30, 30.27, −127.30) in the place designated to enter the answer.
- Answer to each question will be evaluated according to the following marking scheme :

Full Marks : +4 If ONLY the correct answer is entered;
Zero Marks : 0 In all other cases.

2. Two thin wires, Wire-1 of diameter 0.650 mm and Wire-2 of unknown diameter d are given. To obtain the value of d, the diameters of the two wires are measured with a screw gauge. The screw gauge has a pitch of 0.5 mm and there are 100 divisions on the circular scale (CS). The smallest division on the linear scale (LS) is 0.5 mm. The table shows the readings of LS and CS for the measurements. The value of d (in μm) is:

	Readings	
	LS (mm)	CS
Wire–1	0.5	42
Wire–2	1.5	95

[JEE Advanced 2026 Paper 2]

Scan or tap for the full solution

3. As shown in the figure, the resistance of a galvanometer G can be found by the half-deflection method. Here the resistance R_2 is adjusted such that when the key K is closed the deflection in the galvanometer becomes half of the value as compared to when K is open. Half-deflection is obtained at $R_2 = 4\ \Omega$ and thus the galvanometer resistance is found to be 6 Ω. In this half-deflection condition the current (in mA) through the resistor R_1 is:

[JEE Advanced 2026 Paper 2]

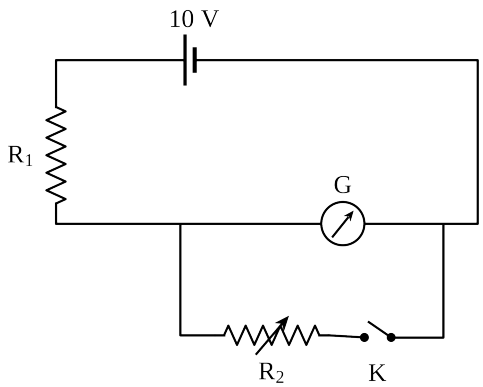

Scan or tap for the full solution

Space for Rough Work

JEE ADVANCED EXPERIMENTAL SKILLS (PHYSICS) — PYQS

Test Pattern : **JEE (Advanced)**

ANSWER KEY

SECTION–1

Ques.	1
Ans.	C

SECTION–2

Ques.	2	3
Ans.	1915	690 to 710