PART 1 - PHYSICS

Topic : Electrostatic potential and capacitance, Mechanical properties of fluids

SECTION–1 : (Maximum Marks : 8)

- This section contains **TWO** questions.
- Each question has **FOUR** options (A), (B), (C) and (D). **ONE OR MORE THAN ONE** of these four option(s) is(are) correct answer(s).
- For each question, choose the option(s) corresponding to (all) the correct answer(s).
- Answer to each question will be evaluated according to the following marking scheme :

Full Marks	: +4	ONLY if (all) the correct option(s) is(are) chosen;
Partial Marks	: +3	If all the four options are correct but ONLY three options are chosen;
Partial Marks	: +2	If three or more options are correct but ONLY two options are chosen, both of which are correct;
Partial Marks	: +1	If two or more options are correct but ONLY one option is chosen and it is a correct option;
Zero Marks	: 0	If none of the options is chosen (i.e. the question is unanswered);
Negative Marks	: −2	In all other cases.

- For example, in a question, if **(A), (B) and (D)** are the ONLY three options corresponding to correct answers, then choosing ONLY (A), (B) and (D) will get +4 marks; choosing ONLY (A) and (B) will get +2 marks; choosing ONLY (A) and (D) will get +2 marks; choosing ONLY (B) and (D) will get +2 marks; choosing ONLY (A) will get +1 mark; choosing ONLY (B) will get +1 mark; choosing ONLY (D) will get +1 mark; choosing no option (i.e. the question is unanswered) will get 0 marks; and choosing any other combination of options will get −2 marks.

1. Two charges $Q_1 = q$ and $Q_2 = mq$ are placed at the points $P_1(a,b)$ and $P_2(ma,mb)$, respectively, in the XY plane, where $a,b \neq 0$ and $m \neq 0,1$. If V_1 is the potential at a point in the XY plane due to charge Q_1 and V_2 is the potential at that point due to charge Q_2. Correct statement(s) for the points at which $|V_1| = |V_2|$ is/are: [JEE Advanced 2026 Paper 2]

(A) For $m = -1$, locus of these points is $ax + by = 0$.

(B) For $m = 2$, the locus of these points is a circle of radius $\frac{2}{3}\sqrt{a^2+b^2}$ centered at $\left(\frac{2}{3}a, \frac{2}{3}b\right)$

(C) For $m = -2$, the locus of these points is a circle of radius $2\sqrt{a^2+b^2}$ centered at $(2a,2b)$

(D) For $m = -3$, locus of these points is $3bx + 3ay = 0$.

Scan or tap for the full solution

2. A positive point charge of 10^{-8} C is kept at a distance of 20 cm from the center of a neutral conducting sphere of radius 10 cm. The sphere is then grounded and the charge on the sphere is measured. The grounding is then removed and subsequently the point charge is moved by a distance of 10 cm further away from the center of the sphere along the radial direction. Taking $\frac{1}{4\pi\varepsilon_0} = 9 \times 10^9\ \text{Nm}^2/\text{C}^2$ (where ε_0 is the permittivity of free space), which of the following statements is/are correct:

[JEE Advanced 2025 Paper 2]

Space for Rough Work

(A) Before the grounding, the electrostatic potential of the sphere is 450 V.

(B) Charge flowing from the sphere to the ground because of grounding is 5×10^{-9} C.

(C) After the grounding is removed, the charge on the sphere is -5×10^{-9} C.

(D) The final electrostatic potential of the sphere is 300 V.

Solution

Prepblink

Space for Rough Work

SECTION–2 : (Maximum Marks : 6)

- This section contains **ONE** paragraph.
- Based on each paragraph, there are **THREE** questions.
- The answer to each question is a **NUMERICAL VALUE**.
- For each question, enter the correct numerical value of the answer (in decimal notation, truncated / rounded-off to the **SECOND DECIMAL PLACE**; e.g. 6.25, 7.00, −0.33, −.30, 30.27, −127.30) in the place designated to enter the answer.
- Answer to each question will be evaluated according to the following marking scheme :

Full Marks : +2 If ONLY the correct answer is entered;
Zero Marks : 0 In all other cases.

Paragraph for Questions 3 and 4

A container of height 2 m, length 2 m and breadth 1 m is made of insulating vertical walls and two large area horizontal metal plates (M_1 and M_2) which extend far beyond the vertical walls in all directions. The container is partitioned into two equal chambers with a thin insulating vertical wall. The partition wall contains a small hole of cross-sectional area $\sqrt{10}$ cm^2 near its bottom edge. Initially the hole is closed and the left chamber of the container is completely filled with a liquid of dielectric constant $\varepsilon_r = 15$ and the right chamber is empty ($\varepsilon_r = 1$). At time t = 0, the hole is opened and the liquid flows from the left chamber to the right chamber. In both the chambers, the space above the liquid has $\varepsilon_r = 1$ and is maintained at atmospheric pressure. The schematic of the container at a time t > 0 is shown in the figure. [Given: acceleration due to gravity is 10 m s^{-2}.]

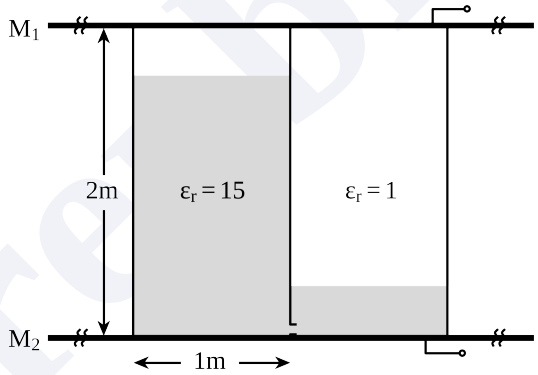

3. The height (in m) of the liquid in left chamber at t = 500 s is: [JEE Advanced 2026 Paper 2]

Scan or tap for the full solution

4. The difference in the capacitance (in F) between the metal plates at t = 0 and that at t = 500 s is $(8 - n)\varepsilon_0$, where ε_0 is the permittivity of free space. The value of n is: [JEE Advanced 2026 Paper 2]

Scan or tap for the full solution

Space for Rough Work

5. An infinitely long thin wire, having a uniform charge density per unit length of 5 nC/m, is passing through a spherical shell of radius 1 m, as shown in the figure. A 10 nC charge is distributed uniformly over the spherical shell. If the configuration of the charges remains static, the magnitude of the potential difference between points P and R, in Volt, is _____.

[Given: In SI units $\frac{1}{4\pi\varepsilon_0} = 9 \times 10^9$, $\ln 2 = 0.7$. Ignore the area pierced by the wire.]

[JEE Advanced 2024 Paper 2]

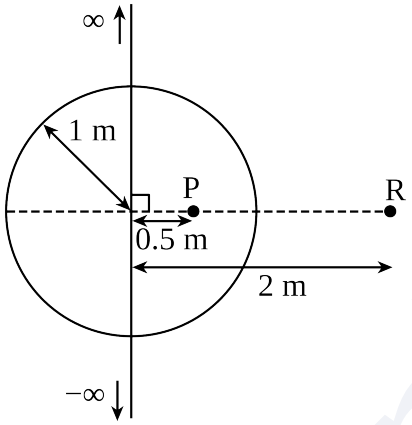

Scan or tap for the full solution

Prepblink

Space for Rough Work

SECTION–3 : (Maximum Marks : 3)

- This section contains **ONE** question.
- Each question has **TWO** lists: **List-I** and **List-II**.
- Four options are given representing matching of elements from List-I and List-II. **ONLY ONE** of these four options corresponds to a correct matching.
- For each question, choose the option corresponding to the correct answer.
- Answer to each question will be evaluated according to the following marking scheme :

Full Marks : +3 If ONLY the correct option is chosen;
Zero Marks : 0 If none of the options is chosen (i.e. the question is unanswered);
Negative Marks : −1 In all other cases.

6. Four identical thin, square metal sheets, S_1, S_2, S_3 and S_4, each of side a are kept parallel to each other with equal distance $d\,(\ll a)$ between them, as shown in the figure. Let $C_0 = \varepsilon_0 a^2/d$, where ε_0 is the permittivity of free space.

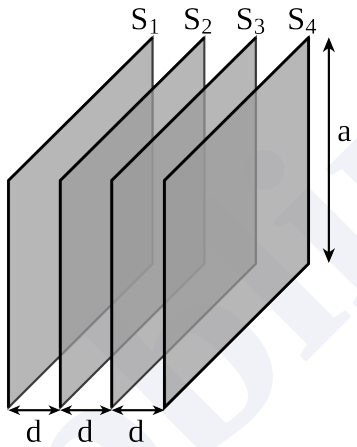

Match the quantities mentioned in **List-I** with their values in **List-II** and choose the correct option.

[JEE Advanced 2024 Paper 1]

	List-I		List-II
P.	The capacitance between S_1 and S_4, with S_2 and S_3 not connected, is	1.	$3C_0$
Q.	The capacitance between S_1 and S_4, with S_2 shorted to S_3, is	2.	$C_0/2$
R.	The capacitance between S_1 and S_3, with S_2 shorted to S_4, is	3.	$C_0/3$
S.	The capacitance between S_1 and S_2, with S_3 shorted to S_1, and S_2 shorted to S_4, is	4.	$2C_0/3$
		5.	$2C_0$

(A) P → 3; Q → 2; R → 4; S → 5
(B) P → 2; Q → 3; R → 2; S → 1
(C) P → 3; Q → 2; R → 4; S → 1
(D) P → 3; Q → 2; R → 2; S → 5

Solution

Space for Rough Work

JEE ADVANCED ELECTROSTATIC POTENTIAL AND CAPACITANCE — PYQS

Test Pattern : **JEE (Advanced)**

ANSWER KEY

SECTION–1

Ques.	1	2															
Ans.	A, B, C	A, B, C															

SECTION–2

Ques.	3	4	5									
Ans.	1.25	1.90 to 2.10	171									

SECTION–3

Ques.	6																											
Ans.	C																											

Prepblink